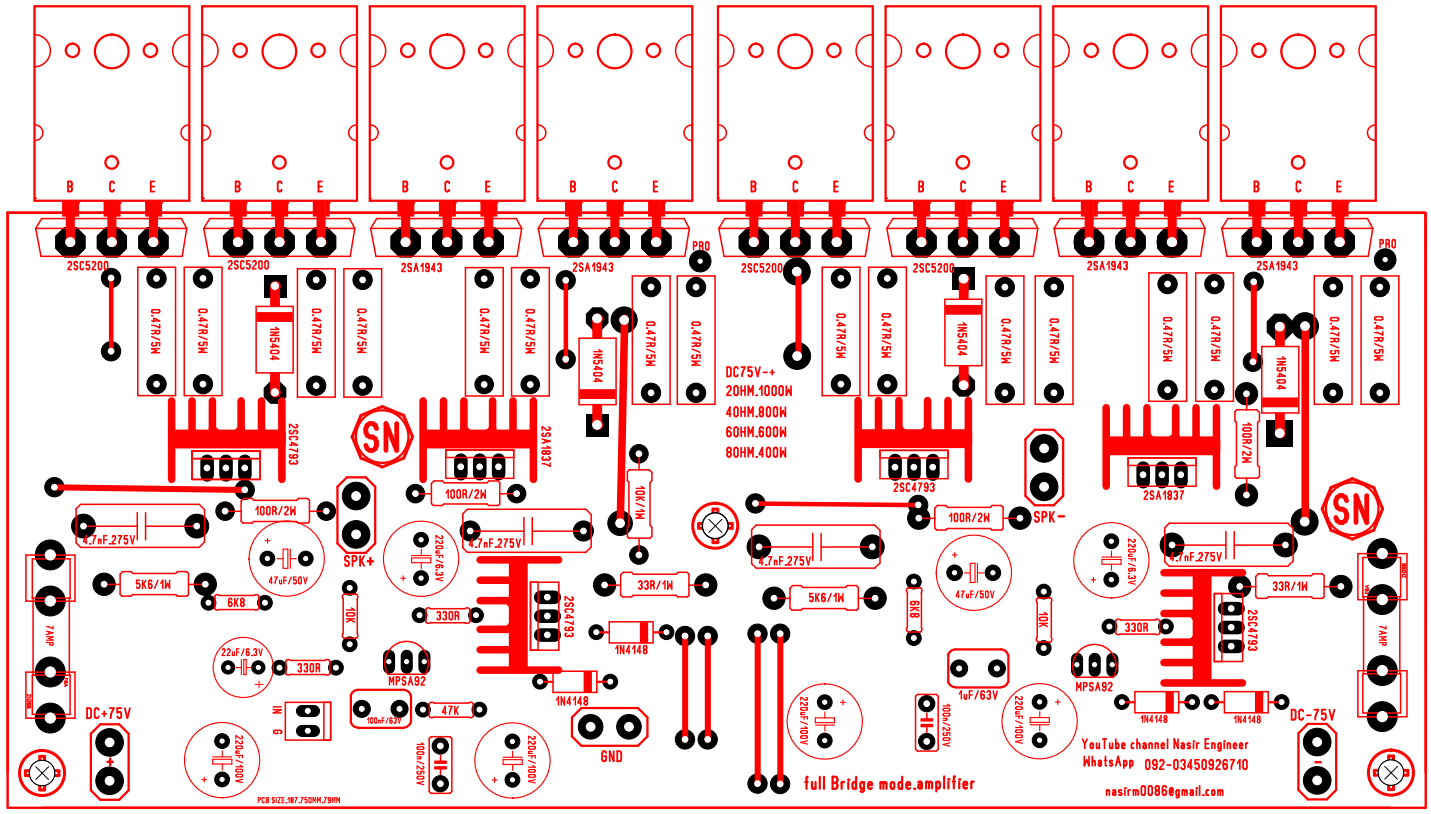

B C E
2SC5200
2SA1943
PRO
0.47R/5W
1N5404
2SC4793
2SA1837
SN
DC75V-+
20HM.1000W
40HM.800W
60HM.600W
80HM.400W
100R/2W
4.7nF.275V
47uF/50V
SPK+
SPK-
5K6/1W
6K8
10K
330R
22uF/6.3V
220uF/6.3V
10K/1W
33R/1W
1N4148
MPSA92
47K
100nF/63V
100n/250V
220uF/100V
1uF/63V
DC+75V
DC-75V
7AMP
GND
PCB SIZE.187.750MM.79MM
full Bridge mode.amplifier
YouTube channel Nasir Engineer
WhatsApp 092-03450926710
nasirm0086@gmail.com

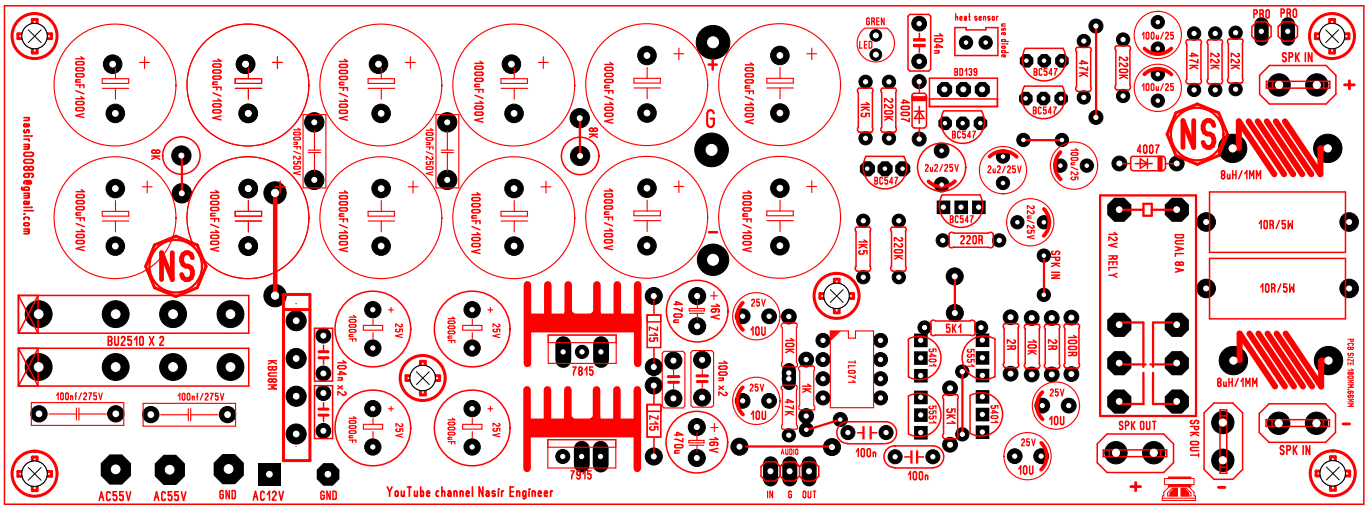

1000uF/100V
100nF/250V
8K
G
GREN
LED
heat sensor
use diode
104n
BD139
BC547
47K
220K
100u/25
22K
PRO
SPK IN
NS
4007
8uH/1MM
2u2/25V
1K5
220R
22u/25V
SPK IN
12V RELY
DUAL 8A
10R/5W
BU2510 X 2
KBU8M
104n x2
100nf/275V
7815
7915
Z15
470u
16V
25V
10U
10K
1K
TL071
5K1
5401
5551
2R
100R
100n
SPK OUT
AUDIO
IN G OUT
AC55V
AC55V
GND
AC12V
GND
YouTube channel Nasir Engineer
nasirm0086@gmail.com
PCB SIZE 180MM.66MM

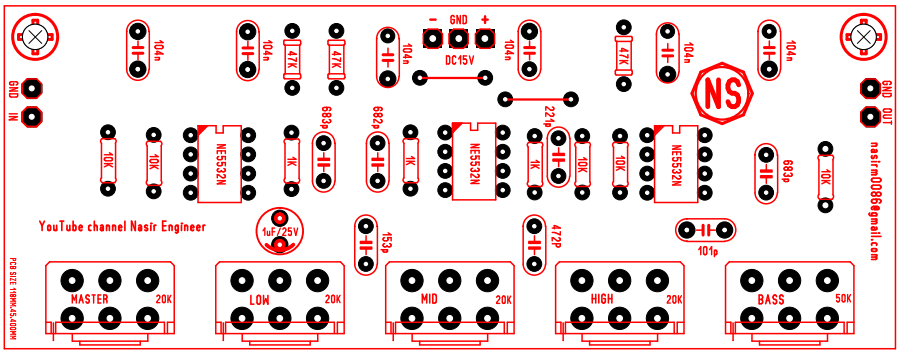

GND
DC15V
104n
47K
GND IN
GND OUT
NS
10K
NE5532N
1K
683p
682p
221p
1uF/25V
153p
472P
101p
YouTube channel Nasir Engineer
nasirm0086@gmail.com
PCB SIZE 118MM.45.400MM
MASTER 20K
LOW 20K
MID 20K
HIGH 20K
BASS 50K

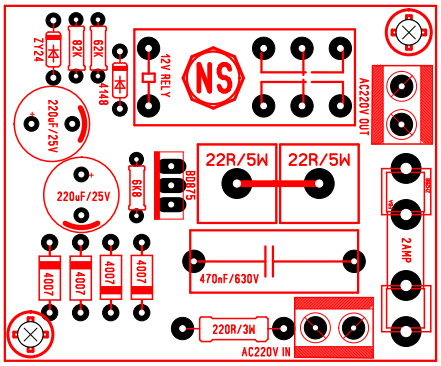

ZY24
82K
62K
4148
12V RELY
NS
AC220V OUT
220uF/25V
6K8
BDR75
22R/5W
22R/5W
4007
470nF/630V
2AMP
220R/3W
AC220V IN