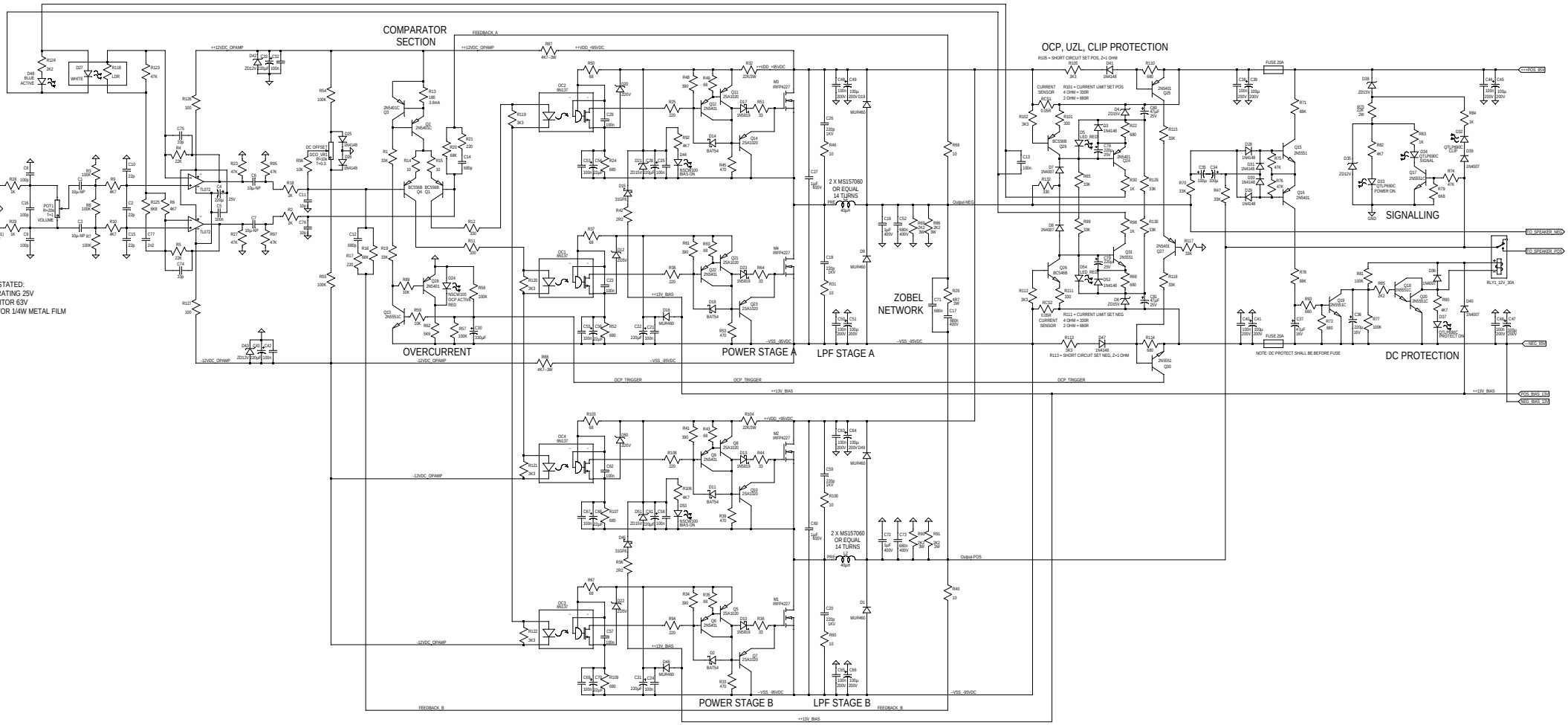

UcD_FBOX ver.2 -- UcD Fullbridge OptoDrive with X-Limiter

Kartino Surodipo - Copyright June 2021
ATTENTION: NOT FOR SALE UNLESS PERMITTED!
Contact: kartino.id@gmail.com
Indonesian - Class D Next Generation Facebook Group