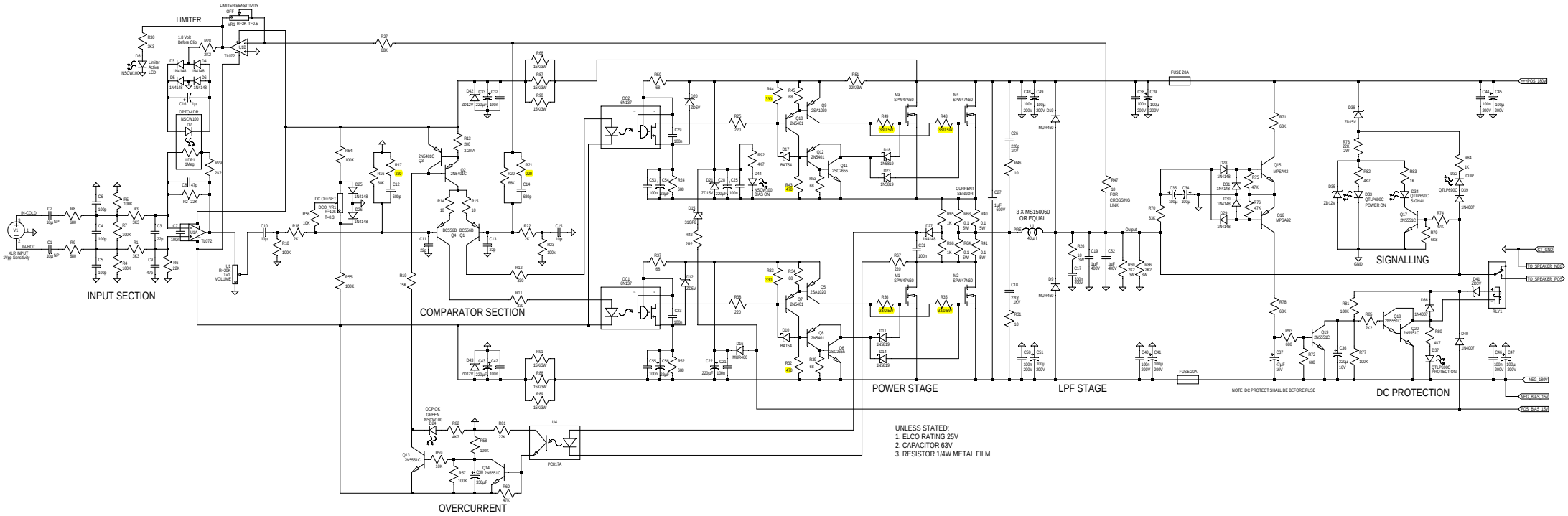

UcD High Voltage Ver.1b

Kartino Surodipo - Copyright Mar 2021
ATTENTION: NOT FOR SALE UNLESS PERMITTED!
Contact: kartino.id@gmail.com
Indonesian - Class D Next Generation Facebook Group