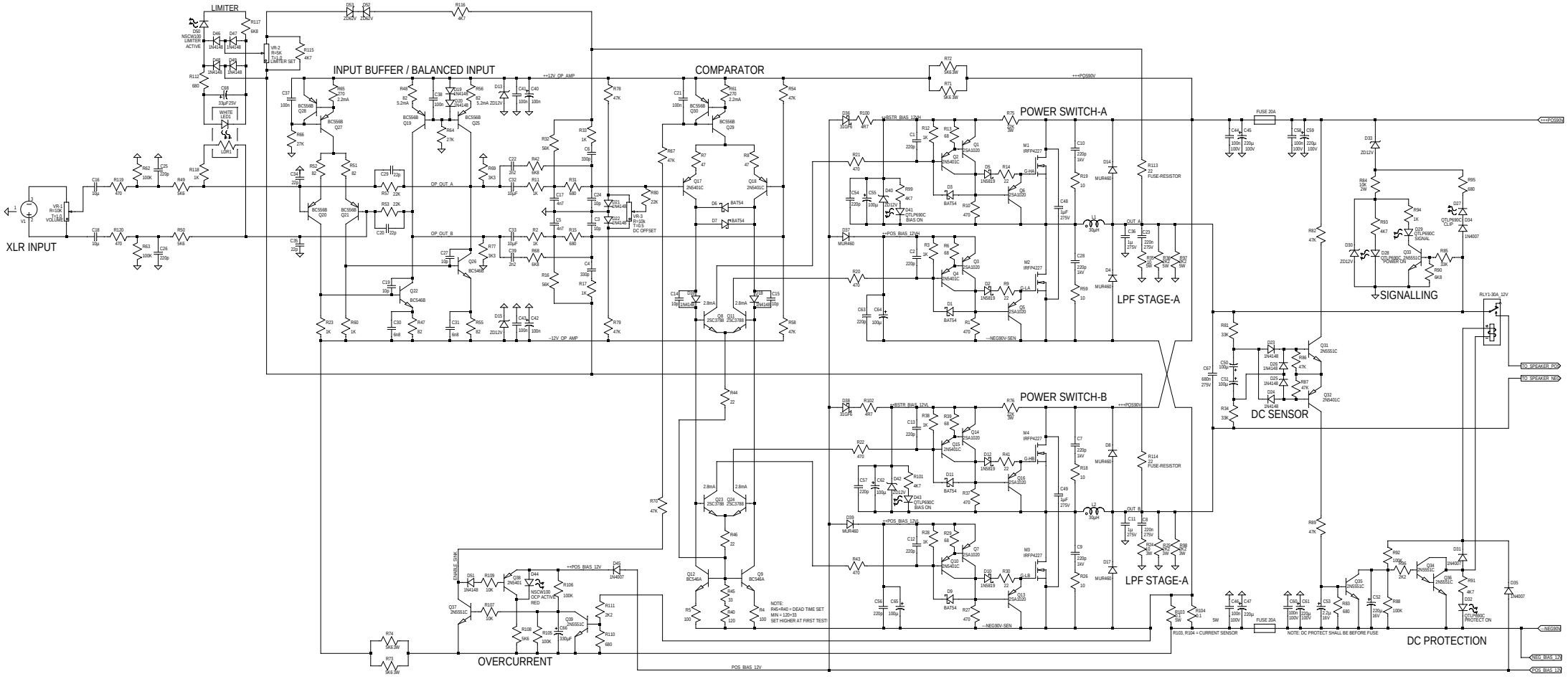

UcD-FD1K -- Fully Discrete Fullbridge UcD Class D Ver.1

Kartino Surodipo - Copyright Aug 2021

ATTENTION: NOT FOR SALE UNLESS PERMITTED!

Contact: kartino.id@gmail.com
Indonesian - Class D Next Generation Facebook Group