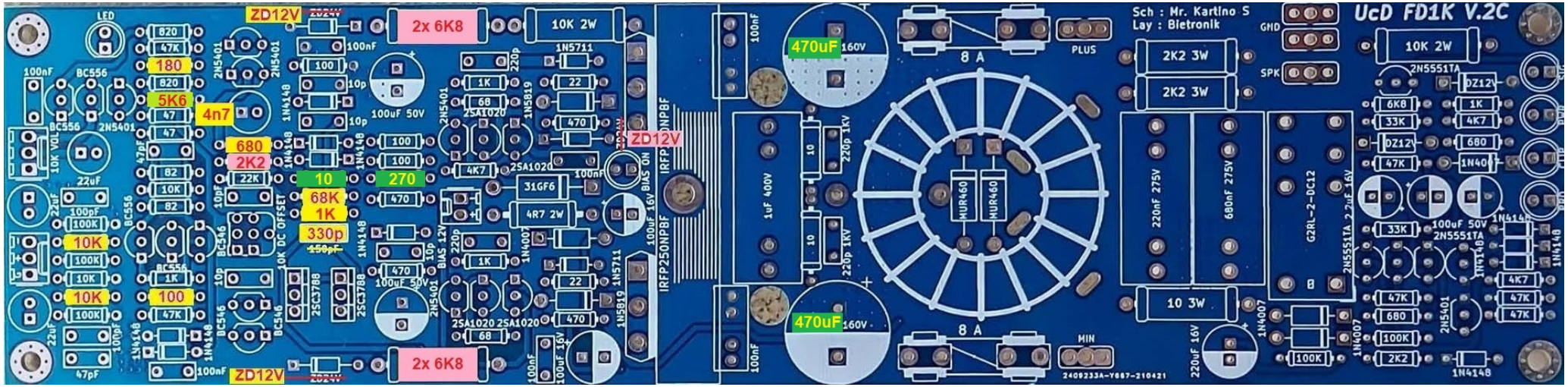

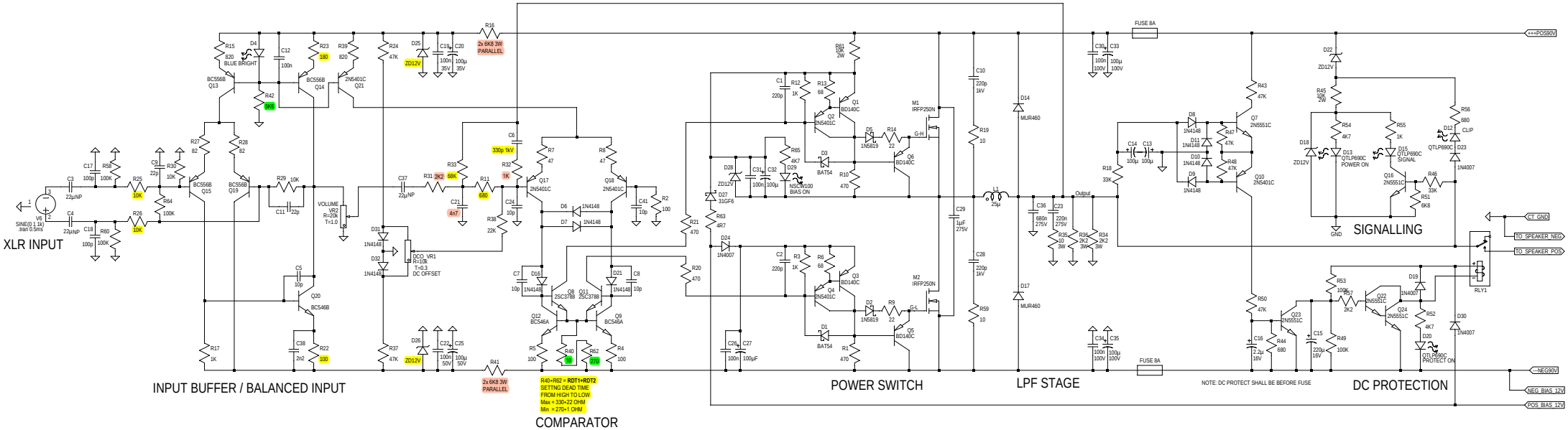

UcD-FD1K -- Fully Discrete Class D v.3b FINAL

Kartino Surodipo, July 2021