D900N New Design 2018 ver.1

Kartino Surodipo Dec 2017

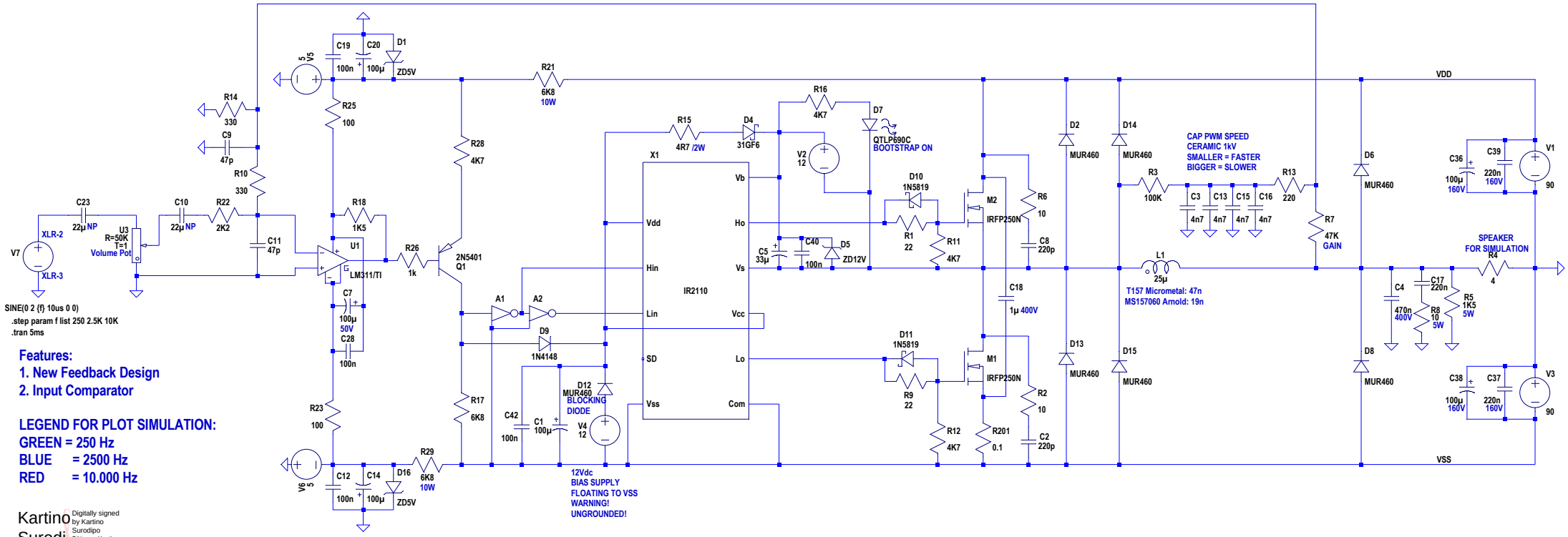

Features:

1. New Feedback Design
2. Input Comparator

LEGEND FOR PLOT SIMULATION:

GREEN = 250 Hz
BLUE = 2500 Hz
RED = 10.000 Hz

Kartino Surodipo

Digitally signed by Kartino Surodipo
DN: cn=Kartino Surodipo, c=ID
Date: 2017.12.22 22:19:20 +07'00'

--- C:\Users\MiniPC\Desktop\Class D\ND900\D900N New Design ver.1.asc ---

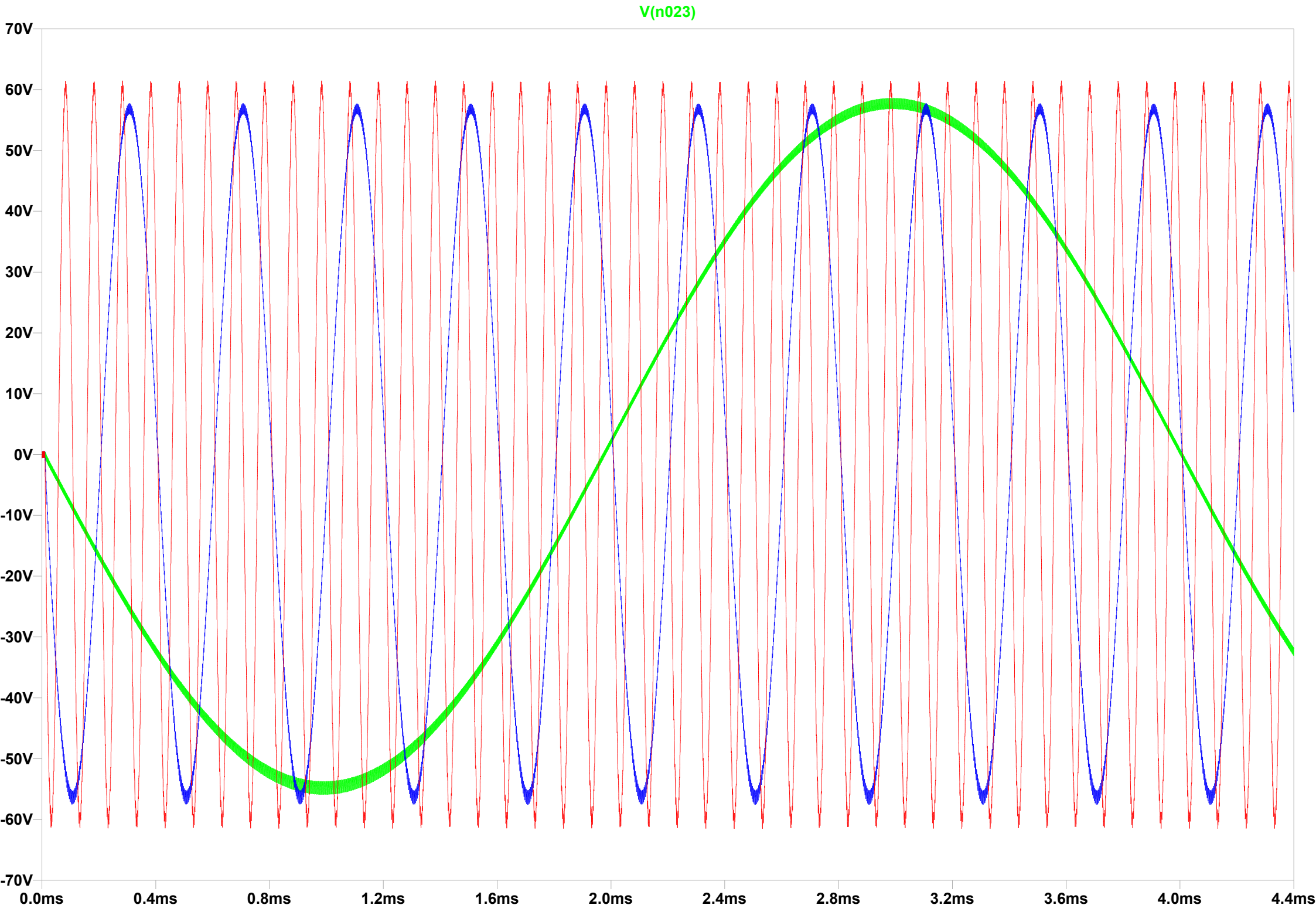
V(n023)
70V
60V
50V
40V
30V
20V
10V
0V
-10V
-20V
-30V
-40V
-50V
-60V
-70V
0.0ms
0.4ms
0.8ms
1.2ms
1.6ms
2.0ms
2.4ms
2.8ms
3.2ms
3.6ms
4.0ms
4.4ms

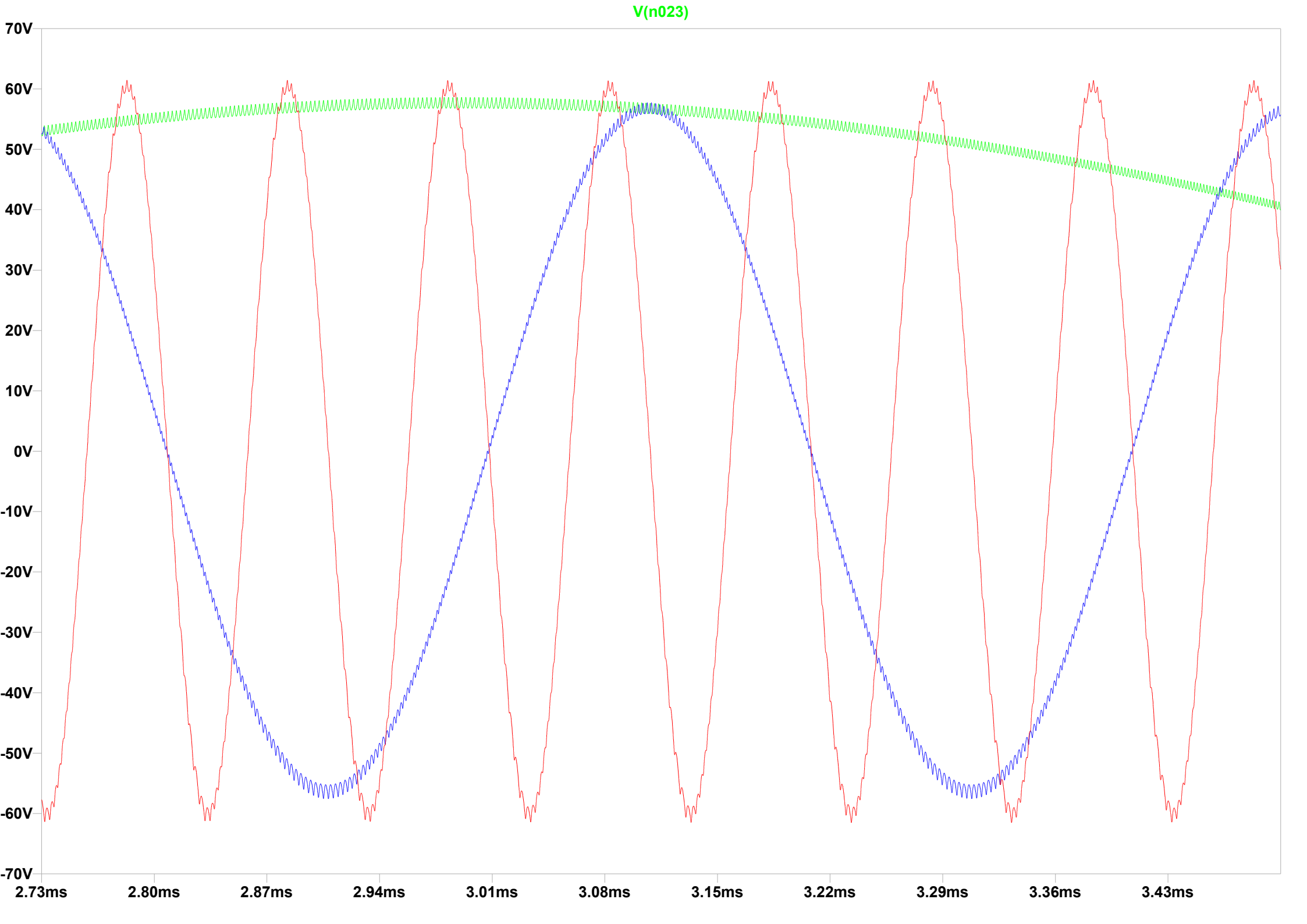
V(n023)
70V
60V
50V
40V
30V
20V
10V
0V
-10V
-20V
-30V
-40V
-50V
-60V
-70V
2.73ms
2.80ms
2.87ms
2.94ms
3.01ms
3.08ms
3.15ms
3.22ms
3.29ms
3.36ms
3.43ms