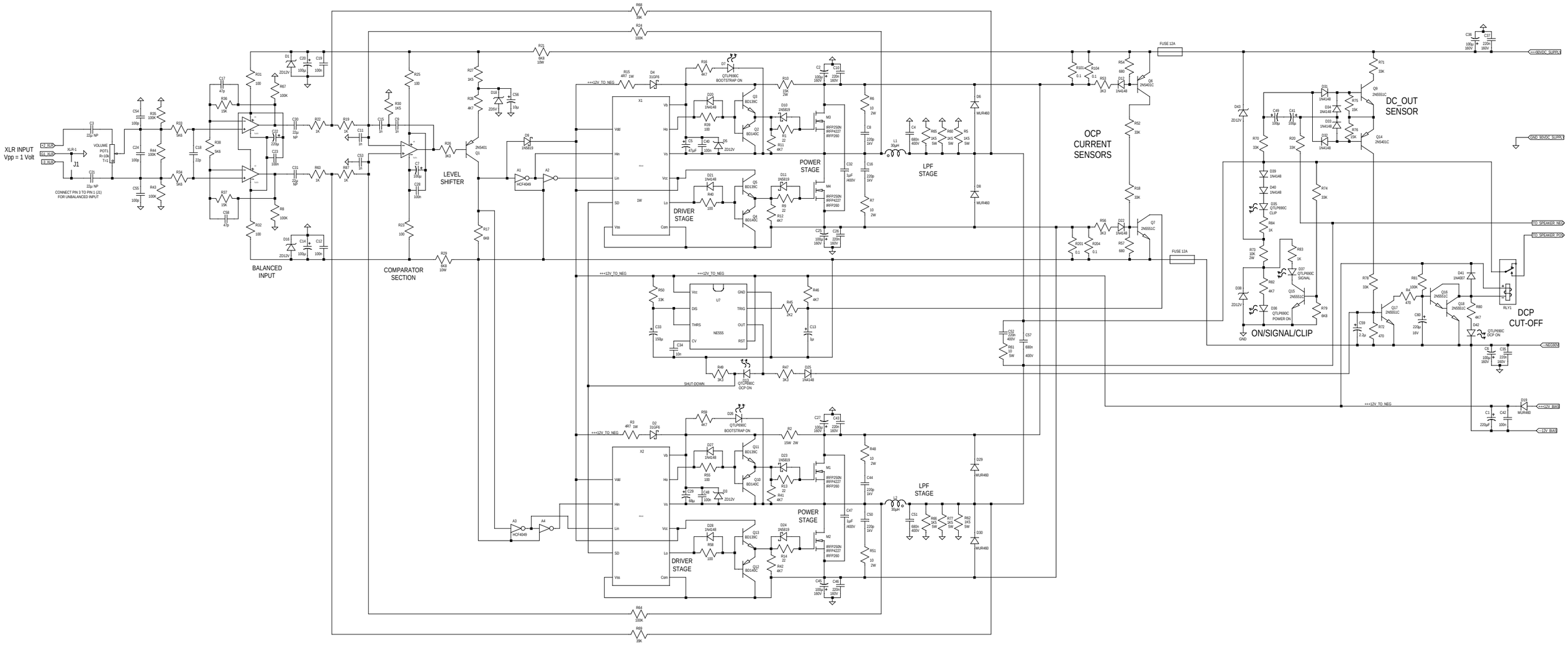

D2KFBNeo Full Bridge Class D Amplifier v.4 DOUBLE FEEDBACK FINALE

Kartino Surodipo , August 2020

--- C:\Users\Mini-PC\Desktop\Class D\D2KNeo - Fullbridge\FINALE ver.4\D2KFBNeo - Fullbridge V.4 Full Scheme.asc ---