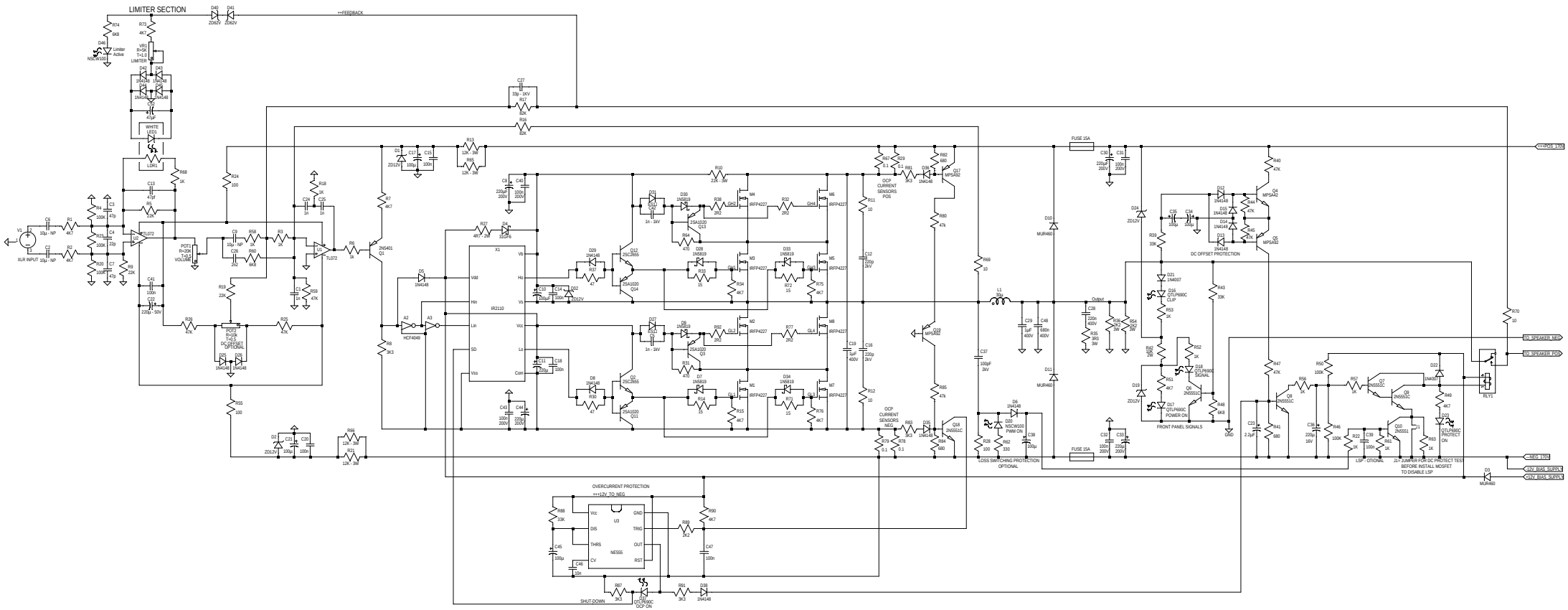

D2KCHV 2500W 4 Ohm Professional Class Amplifier ver.1

High Voltage Supply Cascoded --- Double Feedback Self Oscillating Class D

Design by Kartino Surodipo, 09 September 2021