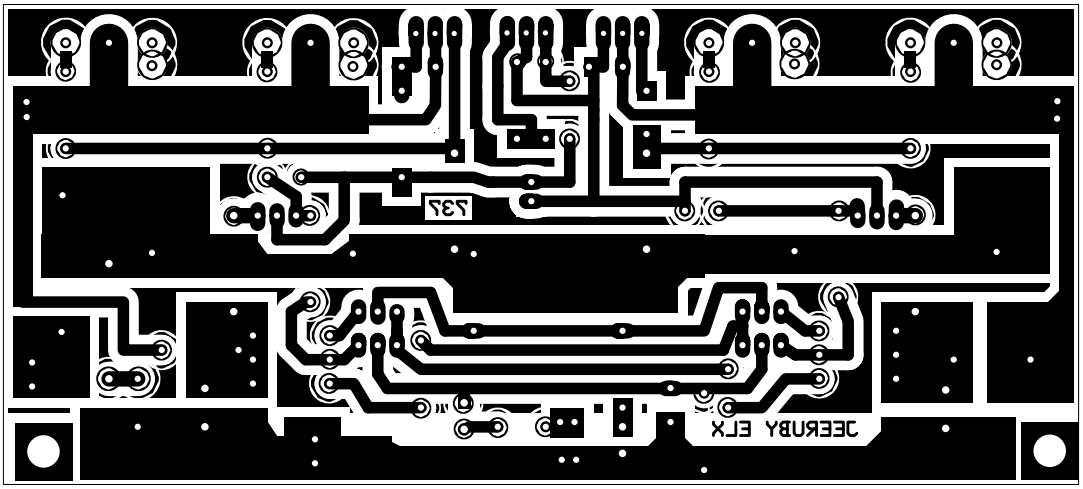

D:\File From desktop\document\Amplifier\Final Amp\av 737 2 pairs 55v.pcb (Bottom layer)

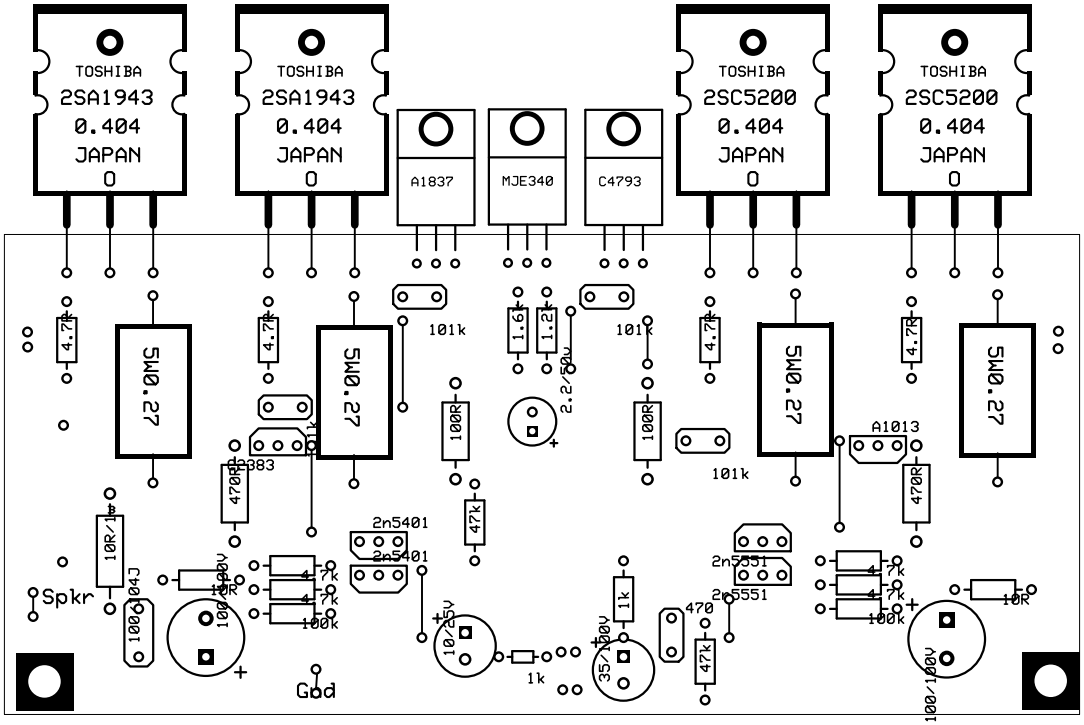

D:\File From desktop\document\Amplifier\Final Amp\av 737 2 pairs 55v.pcb (Silkscreen, Top layer)